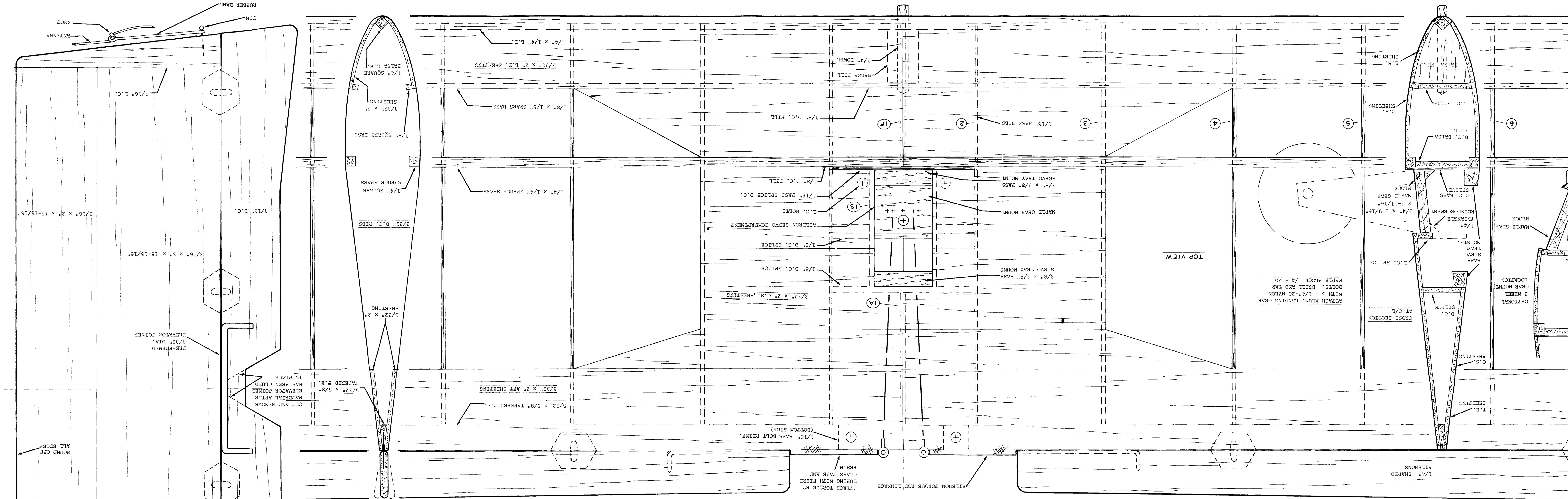

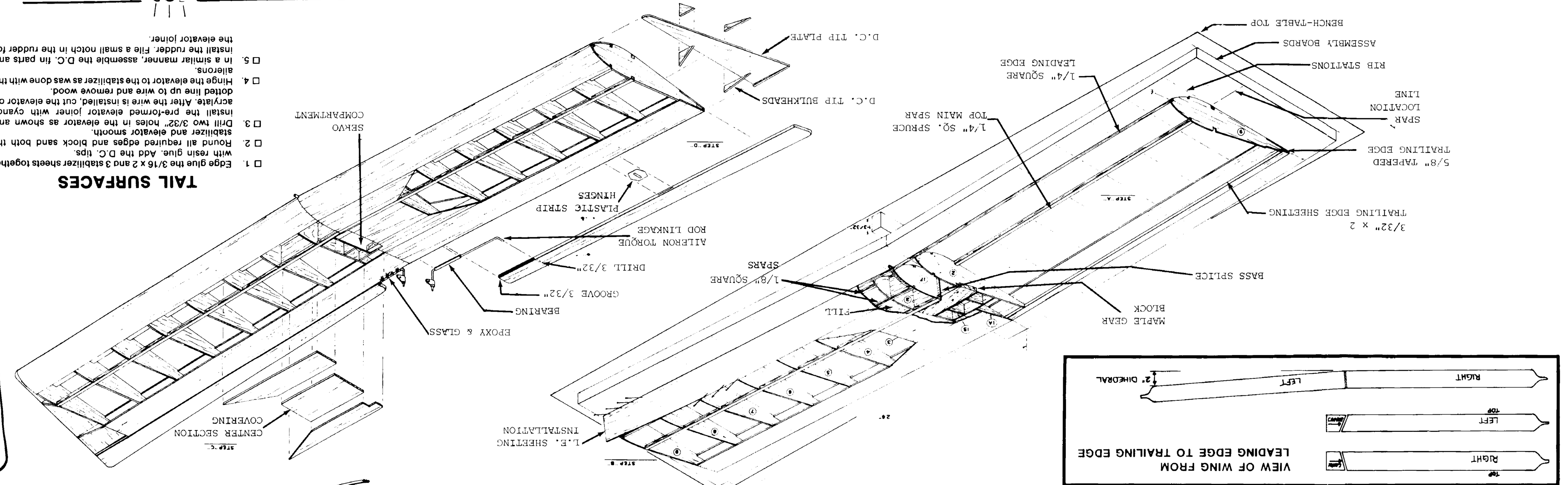

"SWEET 'N LOW STIK"

The "Sweet 'n Low Stik" is a companion to the ever popular shoulder wing "Sweet Stik." It is offered as a familiar craft to learn low wing R/C flying. Complete pattern style aerobatics are excellent when desired, yet flight is docile and appreciated for sport flying and "Fun Fly" type events.

This is a completely prefabricated kit of fine quality materials, ready to be assembled.

ASSEMBLY NEEDS

No special tools are needed. A flat assembly board, minimum size 6" x 40", is used for the fuselage. The wing is assembled on a dihedral board, minimum size for each panel is 12" x 26". All assembly is accomplished with resin glue such as "Tite Bond", "Willhold", etc...Cyanocrylate is used to hold part alignment during assembly.

CHOICE OF POWER

The "Sweet 'n Low Stik" was developed around the "Sport .40" engines which provide peak performance. The engine mounts are versatile, allowing operation with a wide range of engines when desired.

CHOICE OF RADIO

The 4 basic control operations are required for flight, plus a steerable nose gear. Thus a minimum of 4 channels are needed. Any reliable, modern R/C system will fit and suit the design adequately.

ASSEMBLY

- ☐ 1. STUDY the plans and illustrations in detail BEFORE commencing assembly.
- ☐ 2. Assemble the wing and tail first, then the fuselage.
- ☐ 3. Follow the sequence given for each component.
- ☐ 4. As you proceed, remove only the parts required for each specific component from the kit.

WING ASSEMBLY

NOTE: Plans illustrate a method of assembling the wings with the use of an assembly board. An alternate method is to build the wings directly on the plans. If you choose this method, refer to the following:

Disregard any part of plan which refers to a flat assembly board. Construct wing directly over plans, building one half at a time.

Build right half of wing on wing plan with all spars and leading and trailing edges even with center line of the wing plan. Make sure that the notch in rib #2 for landing gear block is facing down. Do not install rib parts 1A, 1F, 1S or any dihedral braces until wing halves are joined.

Now, with the wing pinned down use the pre-cut dihedral gauge. Place it on center line of wing plan against spars and leading and trailing edges, and trim each to the angle of the gauge.

Do the same with the left half of wing but make sure that rib #2 has the landing gear notch facing up. Use the dihedral gauge upside down as illustrated.

Glue the two wing halves together and install the center section parts and the sheeting for the leading and trailing edges.

Step "A"

- ☐ 1. On a flat table-bench top: Butt two 12" x 26" FLAT assembly boards (ply) together. At the butt joint, block them up 1 3/32" and fasten in place. Check flatness with a spirit level
- ☐ 2. 4" back from the front edge, scribe a line parallel to that edge. Using a tri-square scribe the rib locations
- ☐ 3. Align the top 1/4" sq. spruce main spars with the parallel line and pin to the boards.
- ☐ 4. Cement the 5/8" tapered trailing edges to the 3/32 x 2 trailing edge sheeting.
- ☐ 5. Using ribs #2, #4, and #9, locate the rear trailing edge sheeting and pin to the boards. Use servo compartment splice plate as a gauge to locate ribs #2. Using a tri-square, cement these ribs in place with cyanoacrylate. (Use cyanoacrylate for all assembly.)
- ☐ 6. Install the 1/4" sq. leading edge, checking the alignment. Use rib 1F to adjust the location of the center joint.
- ☐ 7. Cement all remaining ribs in place except for No. 1.
- ☐ 8. Install the D.C. main spar balsa splice plate between the No. 2 ribs.
- ☐ 9. Install the bottom 1/4" sq. main spars and then the 1/8" sq. forward top spars.
- ☐ 10. Add the 1/8" D.C. fill to the forward top spars between ribs 1A and 2. Then install the bottom 1/8" spar. Laminiate 1/4" scrap on each side of rib No. 1A for the dowel reinforcement.
- ☐ 11. Cement the 1/16" Bass D.C. splice plate to the aft side of the main spars between the No. 2 ribs. Clamp securely.
- ☐ 12. Using ribs No. 1S as gauges, install the D.C. servo compartment splice plate. Then the No. 1S ribs.
- ☐ 13. Add the landing gear block D.C. splice plate between ribs No. 2. Check the fit of the maple gear block, it must be flat to ribs No. 2. Add triangle reinforcing between ribs 1S. Cement in place with resin glue. Add rib No. 1A to complete Step A.

Step "B"

- ☐ 1. Install the bottom 3/32 x 2 trailing edge sheeting.
- ☐ 2. One side at a time, using resin glue; clamp and pin the 3/32 x 2 leading edge sheet securely to the 1/4" sq. leading edge.
- ☐ 3. Lightly spray the outer side of the leading edge sheet with "Windex". While still wet, apply a seam of resin glue to the 1/8" sq. spar and forward ribs. Form the sheet to the ribs and spar. Pin and clamp in place. Start between ribs No. 5 and 6 and then work away from them.
- ☐ 4. When the 2nd leading edge sheet is in place, add the center section covering. When the glue has thoroughly dried, remove the wing from the jig to complete step "B".

Step "C"

- ☐ 1. With a sanding block, smooth out the bottom side sheeting. Then, one half at a time, fasten the wing to a flat assembly board to maintain alignment. Then install the TOP leading edge sheeting as was done in Step "B".
- ☐ 2. Install the top center section covering.
- ☐ 3. Determine the proper spacing for YOUR servo tray and then install the 3/8" sq. bass tray mounts in the servo compartment to complete Step "C".

Step "D"

- ☐ 1. On the center line of rib No. 9, install the D.C. tip plates. Align them with the required bulkheads.
- ☐ 2. Using a sanding block, smooth out all sheeting. Remove the sharp edge from the ribs at the spar joints.
- ☐ 3. Assemble the aileron torque rod linkages. Then drill and groove the inboard aileron ends to accept the torque rods. Epoxy the torque rods in place.
- ☐ 4. Using a #11 Xacto blade and center lines on the aileron and wing trailing edges, slot each aileron to accept the 3 plastic strip hinges. Insert the hinges half way into the ailerons, apply cyanoacrylate at the slots. Locate the ailerons on the wing, slot the wing trailing edges for the hinges. Insert the hinges into the slots and align. Apply cyanoacrylate at the slots.
- ☐ 5. Fasten the torque rod bearings to the wing trailing edge with epoxy. Reinforce the joint with fibre glass tape and epoxy.
- ☐ 6. To complete the wing, at the leading edge center line drill and install the 1/4" dowel with resin glue.

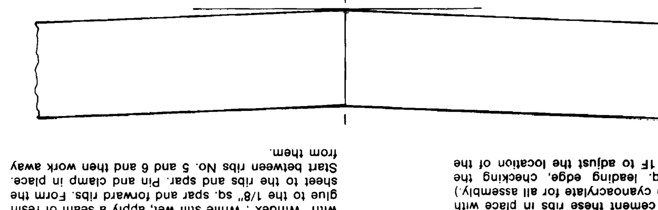

TAIL SURFACES

- ☐ 1. Edge glue the 3/16 x 2 and 3 stabilizer sheets together with resin glue. Add the D.C. tips.
- ☐ 2. Round all required edges and block sand both the stabilizer and elevator smooth.
- ☐ 3. Drill two 3/32" holes in the elevator as shown and install the pre-formed elevator joiner with cyanoacrylate. After the wire is installed, cut the elevator on dotted line up to wire and remove wood.
- ☐ 4. Hinge the elevator to the stabilizer as was done with the ailerons.
- ☐ 5. In a similar manner, assemble the D.C. fin parts and install the rudder. File a small notch in the rudder for the elevator joiner.

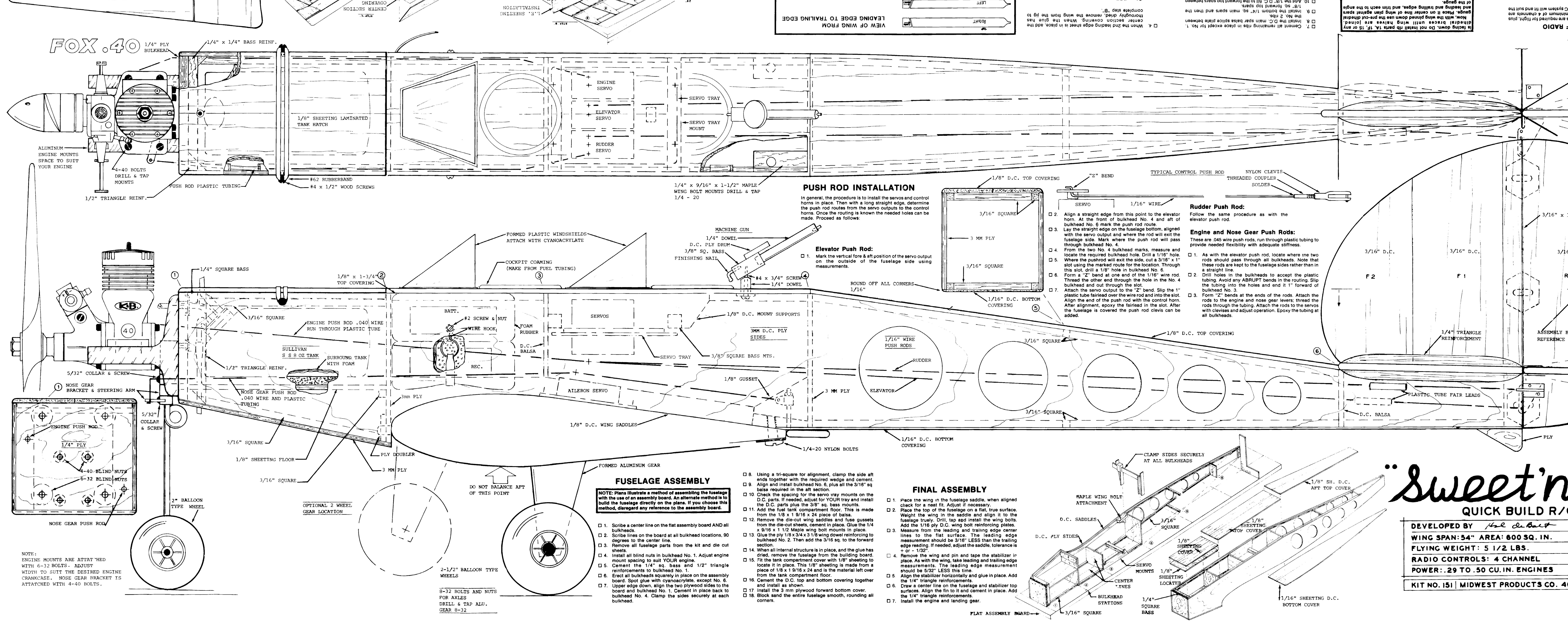

PUSH ROD INSTALLATION

In general, the procedure is to install the servos and control horns in place. Then with a long straight edge, determine the push rod routes from the servo outputs to the control horns. Once the routing is known the needed holes can be made. Proceed as follows:

Elevator Push Rod:

- ☐ 1. Mark the vertical fore & aft position of the servo output on the outside of the fuselage side using measurements.
- ☐ 2. Align a straight edge from this point to the elevator horn. At the front of bulkhead No. 4 and aft of bulkhead No. 6 mark the push rod route.
- ☐ 3. Lay the straight edge on the fuselage bottom, aligned with the servo output and where the rod will exit the fuselage side. Mark where the push rod will pass through bulkhead No. 4.
- ☐ 4. From the two No. 4 bulkhead marks, measure and locate the required bulkhead hole. Drill a 1/16" hole.
- ☐ 5. Where the pushrod will exit the side, cut a 3/16" x 1" slot using the marked route for the location. Through this slot, drill a 1/8" hole in bulkhead No. 6.
- ☐ 6. Form a "Z" bend at one end of the 1/16" wire rod. Thread the other end through the hole in the No. 4 bulkhead and out through the slot.
- ☐ 7. Attach the servo output to the "Z" bend. Slip the 1" plastic tube fairlead over the wire rod and into the slot. Align the end of the push rod with the control horn. After alignment, epoxy the fairlead in the slot. After the fuselage is covered the push rod clevis can be added.

Rudder Push Rod:

Follow the same procedure as with the elevator push rod.

Engine and Nose Gear Push Rods:

These are .045 wire push rods, run through plastic tubing to provide needed flexibility with adequate stiffness.

- ☐ 1. As with the elevator push rod, locate where the two rods should pass through all bulkheads. Note that these rods are kept to the fuselage sides rather than in a straight line.
- ☐ 2. Drill holes in the bulkheads to accept the plastic tubing. Avoid any ABRUPT bends in the routing. Slip the tubing into the holes and end it 1" forward of bulkhead No. 3.
- ☐ 3. Form "Z" bends at the ends of the rods. Attach the rods to the engine and nose gear levers; thread the rods through the tubing. Attach the rods to the servos with clevises and adjust operation. Epoxy the tubing at all bulkheads.

FUSELAGE ASSEMBLY

NOTE: Plans illustrate a method of assembling the fuselage with the use of an assembly board. An alternate method is to build the fuselage directly on the plans. If you choose this method, disregard any reference to the assembly board.

- ☐ 1. Scribe a center line on the flat assembly board AND all bulkheads.
- ☐ 2. Scribe lines on the board at all bulkhead locations, 90 degrees to the center line.
- ☐ 3. Remove all fuselage parts from the kit and die cut sheets.
- ☐ 4. Install all blind nuts in bulkhead No. 1. Adjust engine mount spacing to suit YOUR engine.
- ☐ 5. Cement the 1/4" sq. bass and 1/2" triangle reinforcements to bulkhead No. 1.
- ☐ 6. Erect all bulkheads squarely in place on the assembly board. Spot glue with cyanoacrylate, except No. 6.
- ☐ 7. Upper edge down, align the two plywood sides to the board and bulkhead No. 1. Cement in place back to bulkhead No. 4. Clamp the sides securely at each bulkhead.
- ☐ 8. Using a tri-square for alignment, clamp the side aft ends together with the required wedge and cement.
- ☐ 9. Align and install bulkhead No. 6, plus all the 3/16" sq balsa required in the aft section.
- ☐ 10. Check the spacing for the servo tray mounts on the D.C. parts. If needed, adjust for YOUR tray and install the D.C. parts plus the 3/8" sq. bass mounts.
- ☐ 11. Add the fuel tank compartment floor. This is made from the 1/8 x 1 9/16 x 24 piece of balsa.
- ☐ 12. Remove the die-cut wing saddles and fuse gussets from the die-cut sheets, cement in place. Glue the 1/4 x 9/16 x 1 1/2 Maple wing bolt mounts in place.
- ☐ 13. Glue the ply 1/8 x 3/4 x 3 1/8 wing dowel reinforcing to bulkhead No. 2. Then add the 3/16 sq. to the forward section.
- ☐ 14. When all internal structure is in place, and the glue has dried, remove the fuselage from the building board.
- ☐ 15. Fit the tank compartment cover with 1/8" sheeting to locate it in place. This 1/8" sheeting is made from a piece of 1/8 x 1 9/16 x 24 and is the material left over from the tank compartment floor.
- ☐ 16. Cement the D.C. top and bottom covering together and install as shown.
- ☐ 17. Install the 3 mm plywood forward bottom cover.
- ☐ 18. Block sand the entire fuselage smooth, rounding all corners.

FINAL ASSEMBLY

- ☐ 1. Place the wing in the fuselage saddle, when aligned check for a neat fit. Adjust if necessary.
- ☐ 2. Place the top of the fuselage on a flat, true surface. Weight the wing in the saddle and align it to the fuselage truely. Drill, tap and install the wing bolts. Add the 1/16 ply D.C. wing bolt reinforcing plates.
- ☐ 3. Measure from the leading and trailing edge center lines to the flat surface. The leading edge measurement should be 3/16" LESS than the trailing edge reading. If needed, adjust the saddle, tolerance is + or - 1/32".
- ☐ 4. Remove the wing and pin and tape the stabilizer in place. As with the wing, take leading and trailing edge measurements. The leading edge measurement should be 5/32" LESS this time.
- ☐ 5. Align the stabilizer horizontally and glue in place. Add the 1/4" triangle reinforcements.
- ☐ 6. Draw a center line on the fuselage and stabilizer top surfaces. Align the fin to it and cement in place. Add the 1/4" triangle reinforcements.
- ☐ 7. Install the engine and landing gear.

RADIO INSTALLATION

All servos are mounted in the appropriate servo trays and the push rods are connected. Wrap both the receiver and battery pack in 1/2" thick FOAM RUBBER, not plastic foam, and secure in the indicated compartment with a rubber band and the wire hooks.

Tape all cable connections for security. Run the receiver antenna DIRECTLY out of the fuselage and back to the stabilizer tip.

COVERING AND FINISHING

The fuel tank compartment should be "fuel proofed" with polyester resin. If quick build, quick fly is your objective, the plastic covering materials suite the model well. Do choose an attractive color scheme and follow the material manufacturer's instructions. A more durable finish is possible using fabric covering and paints. If needed, a detailed description is included in the Midwest "Live Wire" instruction manuals.

The cockpit details, windshields and machine gun are added after covering. Use cyanoacrylate to attach them.

PREFLIGHT CHECK OUT

- ☐ 1 The balance point shown is compensated to allow the check to be made without the wing in place. If needed, do add ballast to achieve this point.
- ☐ 2. Check the radio operation thoroughly, adjust control surface movements with the linkages to the amounts shown. DO RANGE CHECK the radio with the engine running.
- ☐ 3. Operate the engine throughout its speed range, adjust if needed to assure reliability.

FLYING

The "Sweet 'n Low Stik" is a high performance model with docile characteristics. If you are a beginner or a low stick time pilot, it is STRONGLY suggested that you should have an EXPERIENCED pilot conduct the test flight for you. For test or training purposes, the model will perform reliably at 2/3 power with the correspondingly lower flight speed. Once thoroughly checked out you will find that the performance of the "Sweet 'n Low Stik" is comparable to pattern type designs, fully aerobatic and forgiving in nature.

CONCLUSION

Midwest Product Co., Inc. trusts that you have found the kit assembly interesting, the finished aircraft something you are proud of and that you will have many enjoyable flights. We at Midwest Products are pleased to have had the opportunity to bring the "Sweet 'n Low Stik" to you.

The Midwest variety of kits is extensive, complete catalog is available for $1.00.

"Sweet'n Low STiK"

QUICK BUILD R/C SPORT FLYER

5/82

DEVELOPED BY Hal deBolt	KIT PRODUCTION: ED ROGALA
WING SPAN: 54" AREA: 600 SQ. IN.	ENGINEERING: HAL deBOLT
FLYING WEIGHT: 5 1/2 LBS.	MANUFACTURING: SUE BURNEY
RADIO CONTROLS: 4 CHANNEL	APPROVED BY: FRANK GARCHER, PRES.
POWER: .29 TO .50 CU. IN. ENGINES	© 1981 MIDWEST PRODUCTS

KIT NO. 151 | MIDWEST PRODUCTS CO. 400 S. INDIANA ST. HOBART, IND. 46342 U.S.A.